Submitted by Highline LED, Midland, TX			
HIGHLINE	**Job Name:**	**Catalog Number:**	**Type:**

WS1001 | WALL SCONCE COLLECTION

PRODUCT IMAGE

- **Finish:** Dark Bronze Powder Coated
- **Shade Material:** Frosted Acrylic
- **Input:** 120V/60Hz
- **Power:** 16W High Volt LED, 6500K
- **Connection Type:** Hardwire Connection
- **Dimensions:** 7” W x 16” H x 4” D
- **Certification:** ETL Listed
- **Warranty:** 3 Years

DIMENSIONS

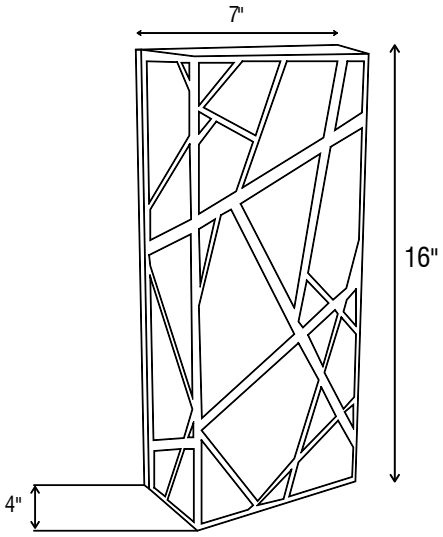

ORDERING INFORMATION

EXAMPLE ORDERING NUMBER : WS1001-ND-120-16-BZ-FWA

Family	Dimming	Input	Power / Lumens / CCT	Finish	Shade Finish	Options
WS1001	**D** - Dimming **ND** - Non-Dimming	**120** - 120V **277** - 277V **UNV** - Universal	**16** - 16W, 1280LM, 6500K	**BZ** - Dark Bronze	**FWA** - Frosted White Acrylic	**Blank** - Not required